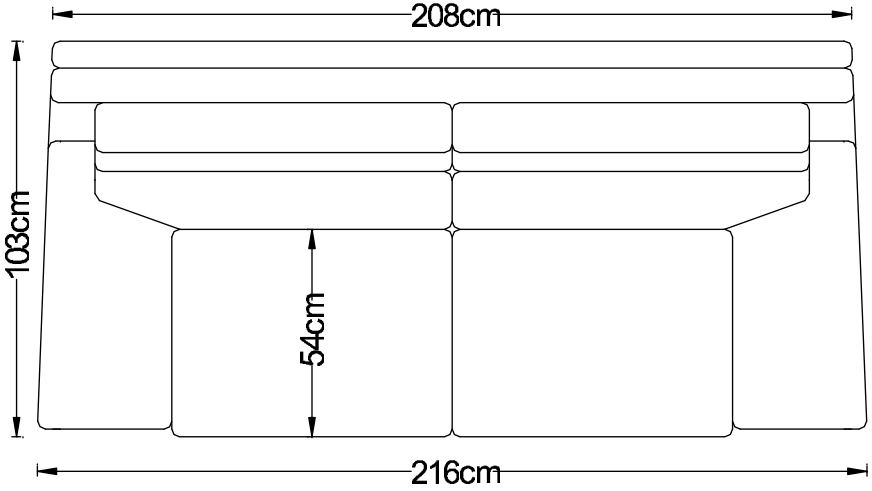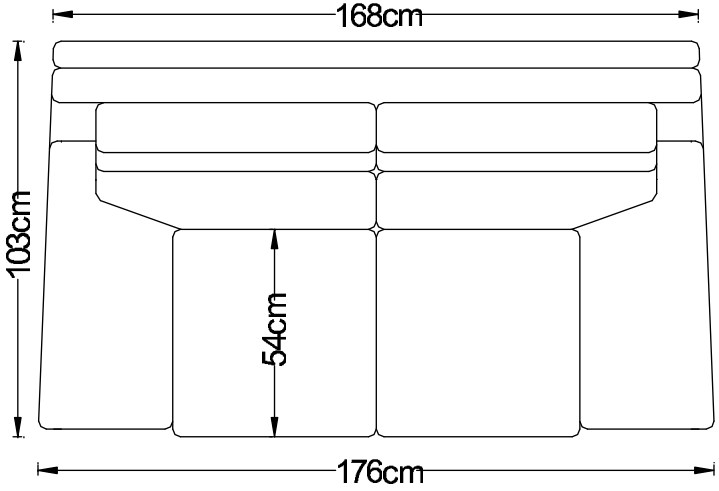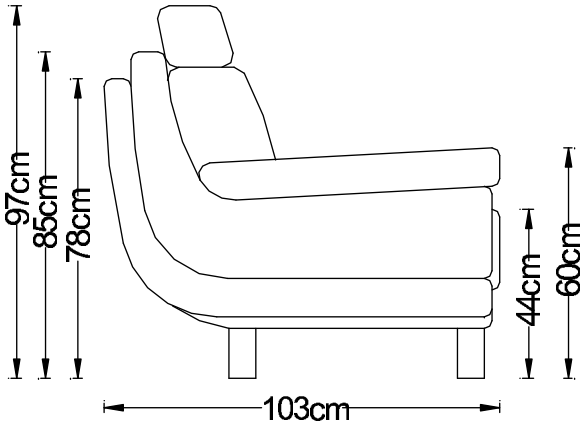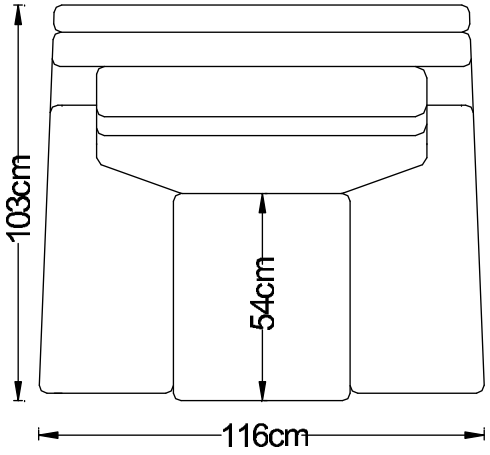Model : #0688(1+2+3)